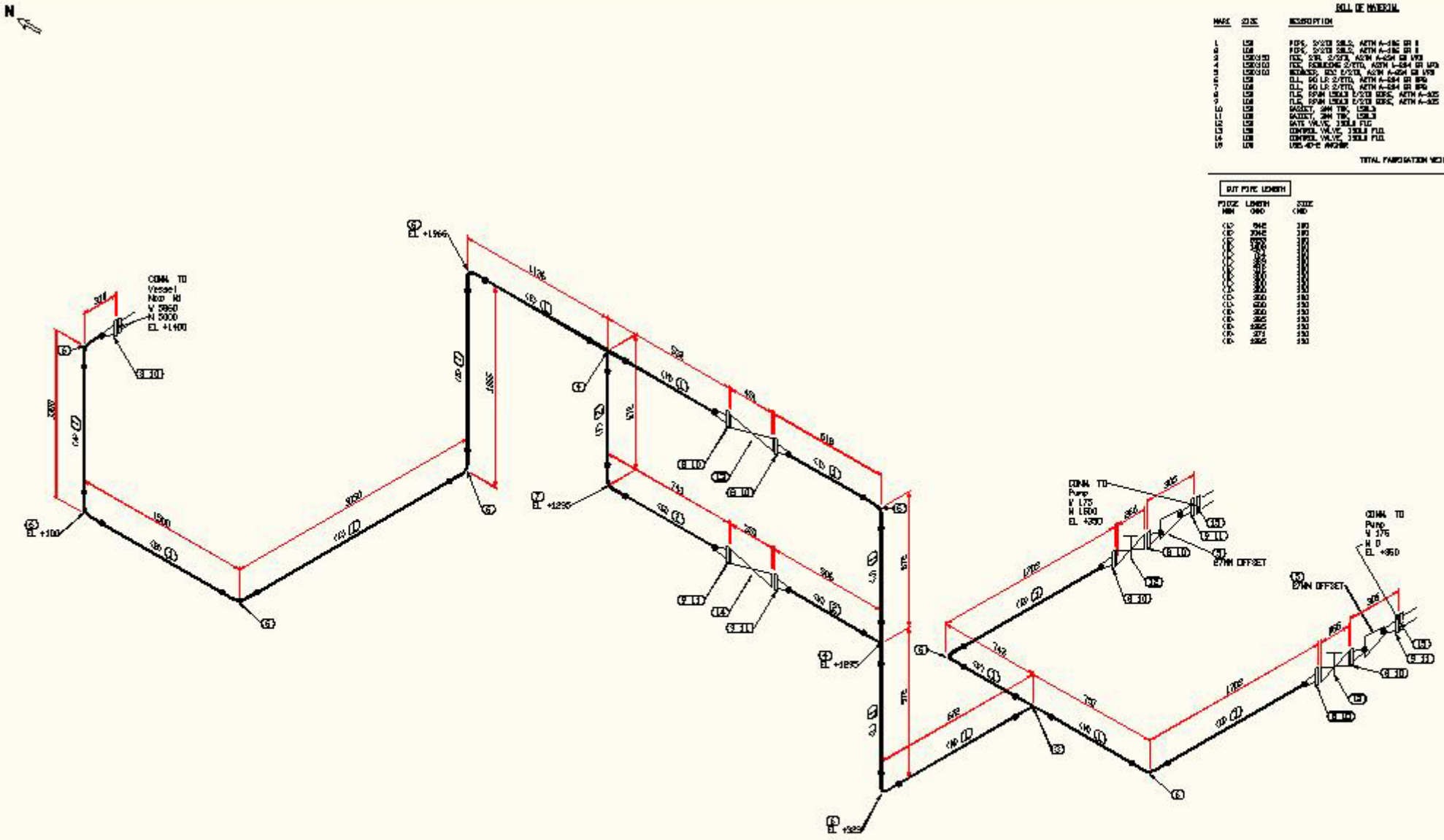

BILL OF MATERIAL

MARK	SIZE	DESCRIPTION	QTY	WEIGHT
1	LS8	PIPE, 2"STD SMLS, ASTM A-106 GR B	11,973 MM	227.8
2	LS8	PIPE, 2"STD SMLS, ASTM A-106 GR B	1,820 MM	18.3
3	LS8X150	TEE, STR, 2"STD, ASTM A-234 GR WPB	2	14.8
4	LS8X150	TEE, REDUCING 2"STD, ASTM A-234 GR WPB	8	85.1
5	LS8X150	REDUCER, 2"X1"STD, ASTM A-234 GR WPB	8	7.4
6	LS8	ELL, 90 LR 2"STD, ASTM A-234 GR WPB	8	95.0
7	LS8	ELL, 90 LR 2"STD, ASTM A-234 GR WPB	1	4.0
8	LS8	FLG, SPWN LSOLD 2"STD RORS, ASTM A-105	7	26.3
9	LS8	FLG, SPWN LSOLD 2"STD RORS, ASTM A-105	4	67.8
10	LS8	GASKET, 2MM TRK, LSOLD	7	7.0
11	LS8	GASKET, 2MM TRK, LSOLD	4	4.0
12	LS8	GATE VALVE, 3SOLD FLG	3	150.0
13	LS8	CONTROL VALVE, 3SOLD FLG	3	3.0
14	LS8	CONTROL VALVE, 3SOLD FLG	3	3.0
15	LS8	USS-40-E ANCHOR	2	–
		TOTAL FABRICATION WEIGHT		778.6

CUT PIPE LENGTH

PIPE SIZE MM	LENGTH MM	SIZE (NO)
(1)	1942	1(0)
(2)	3042	1(0)
(3)	1950	1(0)
(4)	1950	1(0)
(5)	1950	1(0)
(6)	1950	1(0)
(7)	1950	1(0)